08. 10. 09

※

| LENS/レンズ | A (TELE) | B (WIDE) |
|---|---|---|
| LNS-S11 | -0.12 (Fixed/固定) | |
| LNS-T10 | 0.85 (Fixed/固定) | |
| LNS-T11 | 0.99 (Fixed/固定) | |
| LNS-W10 | -0.39 (Fixed/固定) | |
| LNS-W11 | -0.47 (Fixed/固定) | |

・The projection from the cabinet is not in a minus display.
・マイナス表示はキャビからの突出なし

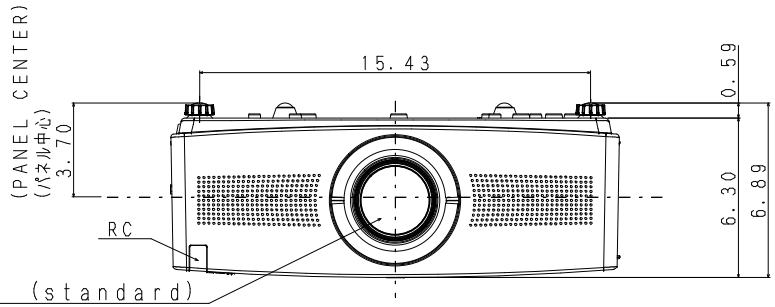


LNS-S11 (standard)
※refer to the table
※表参照

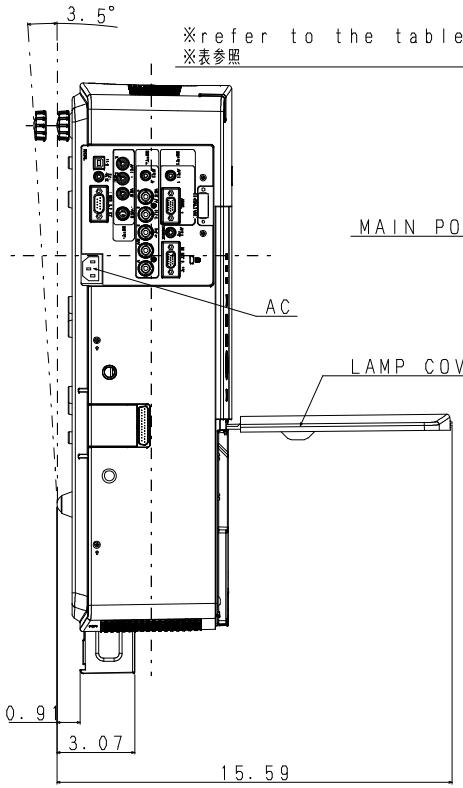


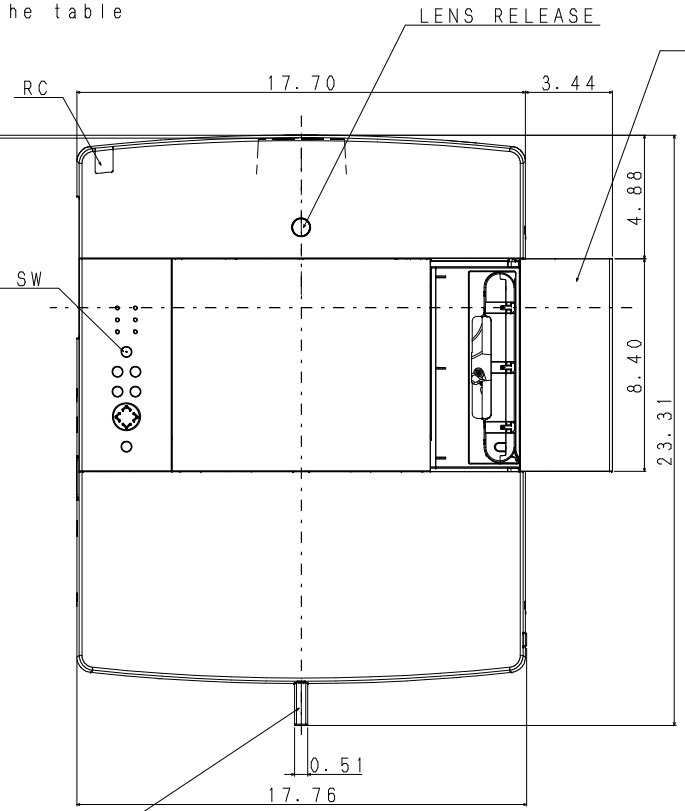


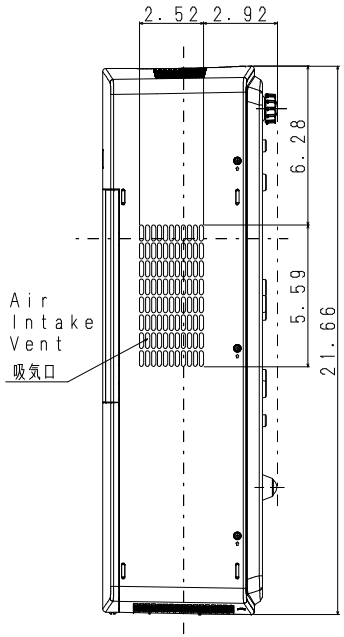


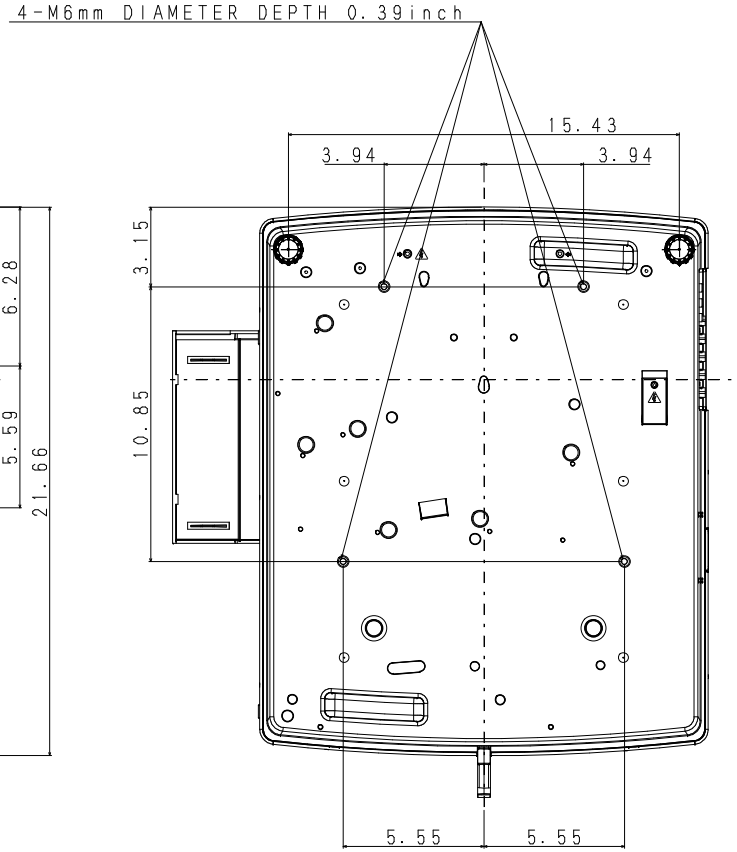


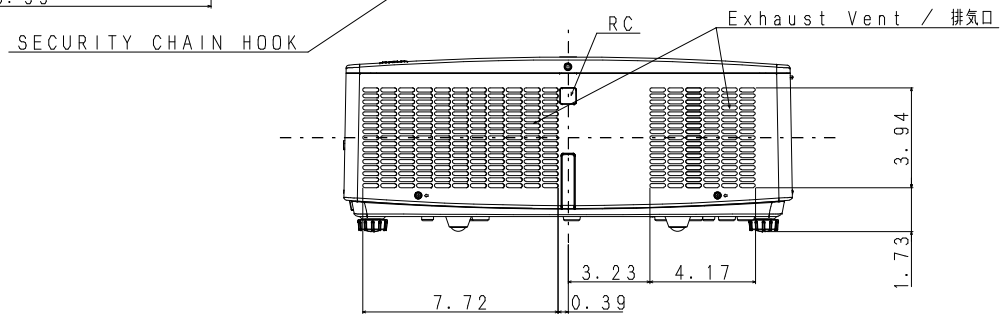


SET DIM:21.66(W)X6.30(H)X17.70(D)

SET DIM:21.66(W)X6.89(H)X17.76(D)
(including projection)
(突起物含む)

KH7AL